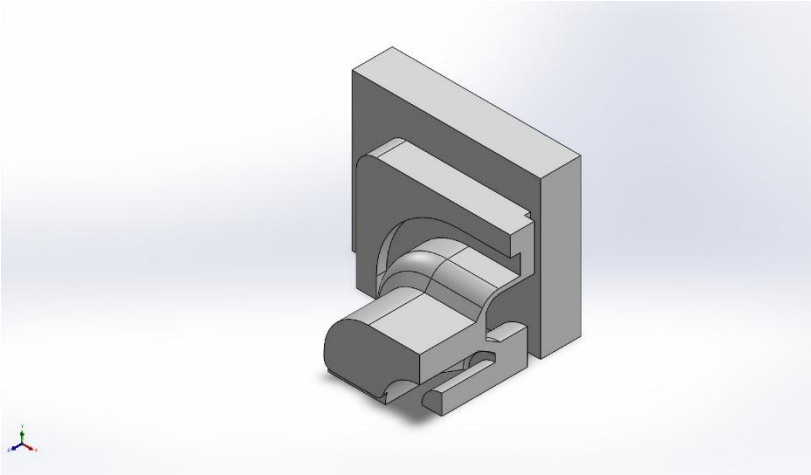

Simulation of Press the rubber button repeatedly

Date: April 26, 2026
Designer: Solidworks
Study name: Nonlinear 1
Analysis type: Nonlinear - Static

Table of Contents

Description 1
Assumptions 2
Model Information 2
Study Properties 3
Units 3
Material Properties 4
Loads and Fixtures 5
Connector Definitions 6
Interaction Information 6
Mesh information 7
Sensor Details 8
Resultant Forces 9
Beams 9
Study Results 10
Conclusion 12

Description

No Data

Assumptions

Model Information

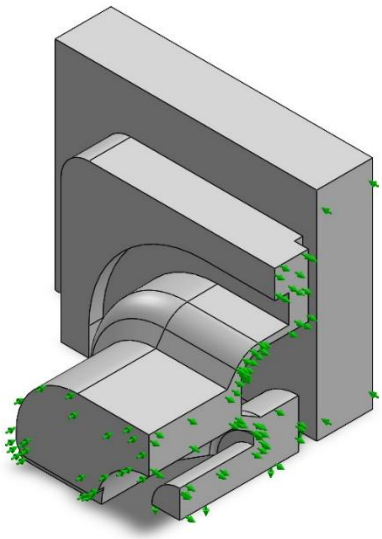

Model name: Press the rubber button repeatedly
Current Configuration: Default

Solid Bodies

Document Name and Reference	Treated As	Volumetric Properties	Document Path/Date Modified
Imported1 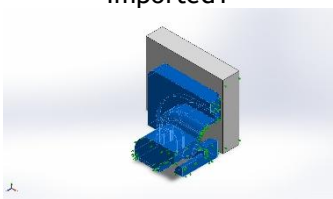	Solid Body	Mass:8.3356e-05 kg Volume:8.68292e-08 m^3 Density:960 kg/m^3 Weight:0.000816889 N	C:\Users\26869\Desktop\game\Solidwork\resource\model\第 56 课\Press the rubber button repeatedly.SLDPRT
Imported2 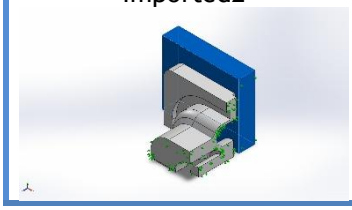	Solid Body	Mass:0.00014847 kg Volume:1.45559e-07 m^3 Density:1,020 kg/m^3 Weight:0.00145501 N	C:\Users\26869\Desktop\game\Solidwork\resource\model\第 56 课\Press the rubber button repeatedly.SLDPRT

Study Properties

Study name	Nonlinear 1
Analysis type	Nonlinear - Static
Mesh type	Solid Mesh
Start time	0 Seconds
End time	6 Seconds
Time increment	Auto stepping
Compute free body forces	Off
Contact penalty stiffness scale factor	1
Large displacement formulation:	On
Update load direction with deflection:	Off
Large strain formulation:	Off
Save data for restarting the analysis	Off
Thermal Effect:	On
Thermal option	Include temperature loads
Zero strain temperature	298 Kelvin
Solver type	Large Problem Direct Sparse
Incompatible bonding options	Simplified
Control technique:	Force
Iterative technique:	NR(Newton-Raphson)
Integration Method	Newmark
Result folder	SOLIDWORKS document (C:\Users\26869\Desktop\game\Solidwork\resource\model\第 56 课)

Units

Unit system:	SI (MKS)
Length/Displacement	mm
Temperature	Kelvin
Angular velocity	Rad/sec
Pressure/Stress	N/m^2

Material Properties

Model Reference	Properties	Components
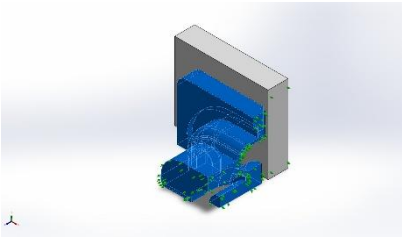	**Name:** body you **Model type:** HyperElastic - Mooney Rivlin **Default failure criterion:** Unknown **Poisson's ratio:** 0.45 **Mass density:** 960 kg/m^3	SolidBody 1(Imported1)(橡胶按键)
Curve Data: Simple Tension		
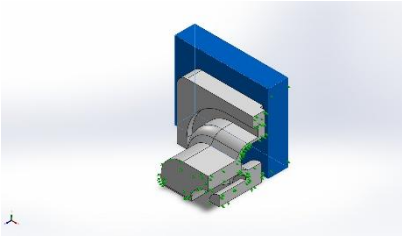	**Name:** ABS **Model type:** Linear Elastic Isotropic **Default failure criterion:** Unknown **Tensile strength:** 3e+07 N/m^2 **Elastic modulus:** 2e+09 N/m^2 **Poisson's ratio:** 0.394 **Mass density:** 1,020 kg/m^3 **Shear modulus:** 3.189e+08 N/m^2	SolidBody 2(Imported2)(橡胶按键)
Curve Data:N/A		

Loads and Fixtures

Fixture name	Fixture Image	Fixture Details	Function Curve
Symmetry-1	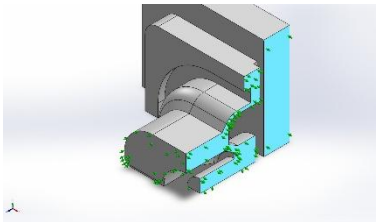	**Entities:** 4 face(s) **Type:** Symmetry	

Resultant Forces

Components	X	Y	Z	Resultant
Reaction force(N)	-0.278233	0.291003	0.0655814	0.407918
Reaction Moment(N.m)	0	0	0	0

Fixed-1	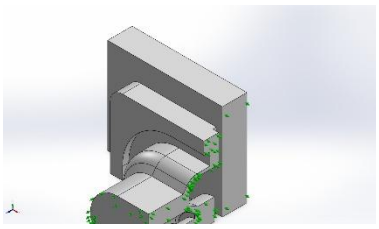	**Entities:** 1 face(s) **Type:** Fixed Geometry	

Resultant Forces

Components	X	Y	Z	Resultant
Reaction force(N)	0.266454	-0.274634	0.843945	0.926642
Reaction Moment(N.m)	0	0	0	0

On Flat Faces-1	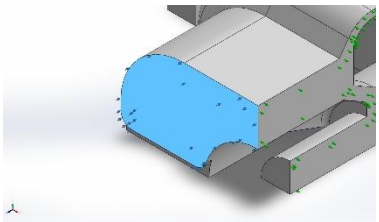	**Entities:** 1 face(s) **Type:** On Flat Faces **Translation:** ---, ---, -1.2 **Units:** mm **Time variation:** on	Time curve

Resultant Forces

Components	X	Y	Z	Resultant
Reaction force(N)	0	0	-0.843946	0.843946
Reaction Moment(N.m)	0	0	0	0

Connector Definitions

No Data

Interaction Information

Interaction	Interaction Image	Interaction Properties
Local Interaction-1	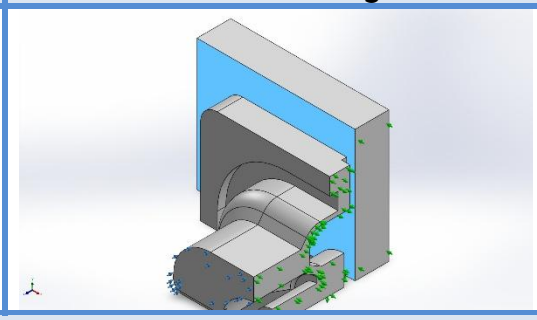	**Type:** Contact interaction pair **Entities:** 2 face(s) **Advanced:** Surface to surface

Contact/Friction force

Components	X	Y	Z	Resultant
Contact Force(N)	-1.4733E-05	1.5158E-05	-0.5328	0.5328

Interaction	Interaction Image	Interaction Properties
Local Interaction-2	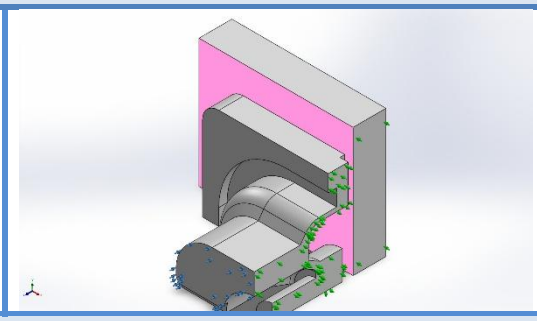	**Type:** Contact interaction pair **Entities:** 2 face(s) **Advanced:** Surface to surface

Contact/Friction force

Components	X	Y	Z	Resultant
Contact Force(N)	4.2402E-07	-7.5849E-08	-0.31115	0.31115

Mesh information

Mesh type	Solid Mesh
Mesher Used:	Blended curvature-based mesh
Jacobian points for High quality mesh	16 Points
Maximum element size	0.861166 mm
Minimum element size	0.0803635 mm
Mesh Quality	High

Mesh information - Details

Total Nodes	14660
Total Elements	8647
Maximum Aspect Ratio	13.34
% of elements with Aspect Ratio < 3	92.9
Percentage of elements with Aspect Ratio > 10	0.081
Percentage of distorted elements	0
Time to complete mesh(hh;mm;ss):	00:00:03
Computer name:	REMY

Mesh Quality Plots

Name	Type	Min	Max
Quality1	Mesh	-	-

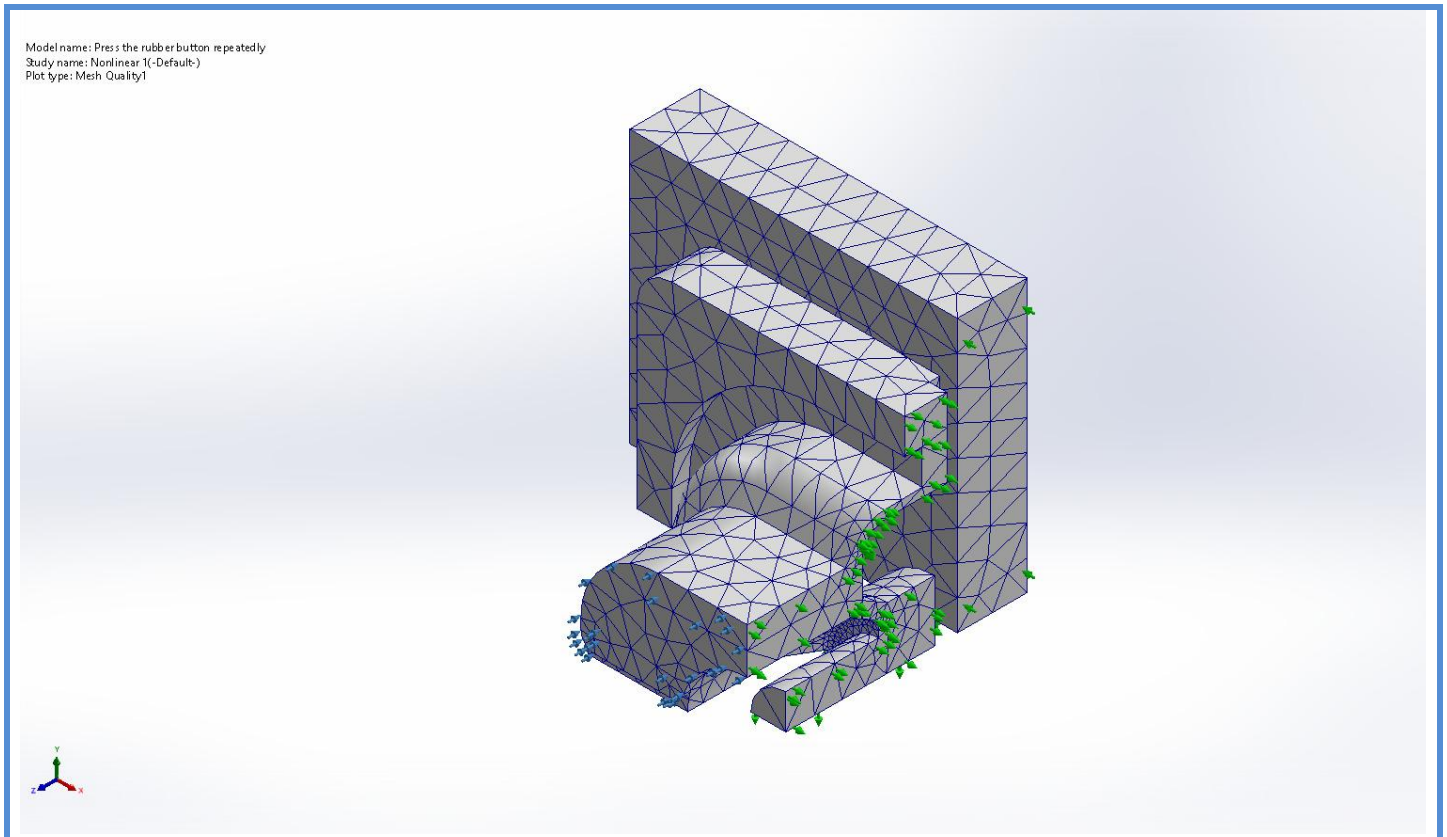

Press the rubber button repeatedly-Nonlinear 1-Quality-Quality1

Sensor Details

No Data

Resultant Forces

Reaction forces

Selection set	Units	Sum X	Sum Y	Sum Z	Resultant
Entire Model	N	7.94389e-08	-1.00117e-08	6.78119e-08	1.04925e-07

Reaction Moments

Selection set	Units	Sum X	Sum Y	Sum Z	Resultant
Entire Model	N.m	0	0	0	0

Free body forces

Selection set	Units	Sum X	Sum Y	Sum Z	Resultant
Entire Model	N	0	0	0	0

Free body moments

Selection set	Units	Sum X	Sum Y	Sum Z	Resultant
Entire Model	N.m	0	0	0	0

Beams

No Data

Study Results

Name	Type	Min	Max
Stress1	VON: von Mises Stress at Step No: 23(6 Seconds)	5.518e+01N/m^2 Node: 14656	1.401e+06N/m^2 Node: 1962

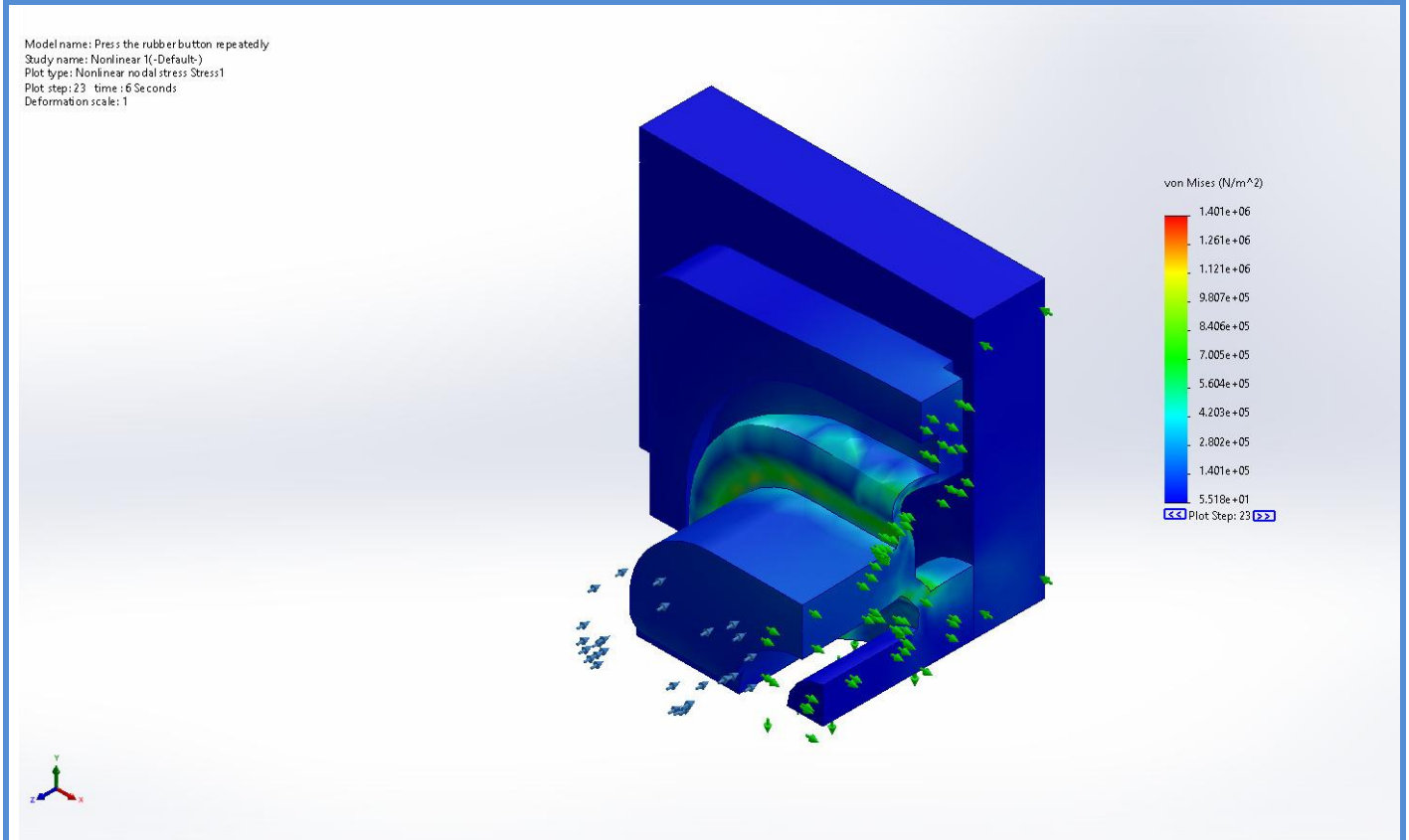

Press the rubber button repeatedly-Nonlinear 1-Stress-Stress1

Name	Type	Min	Max
Displacement1	URES: Resultant Displacement at Step No: 4(0.9 Seconds)	0.000e+00mm Node: 11474	1.082e+00mm Node: 610

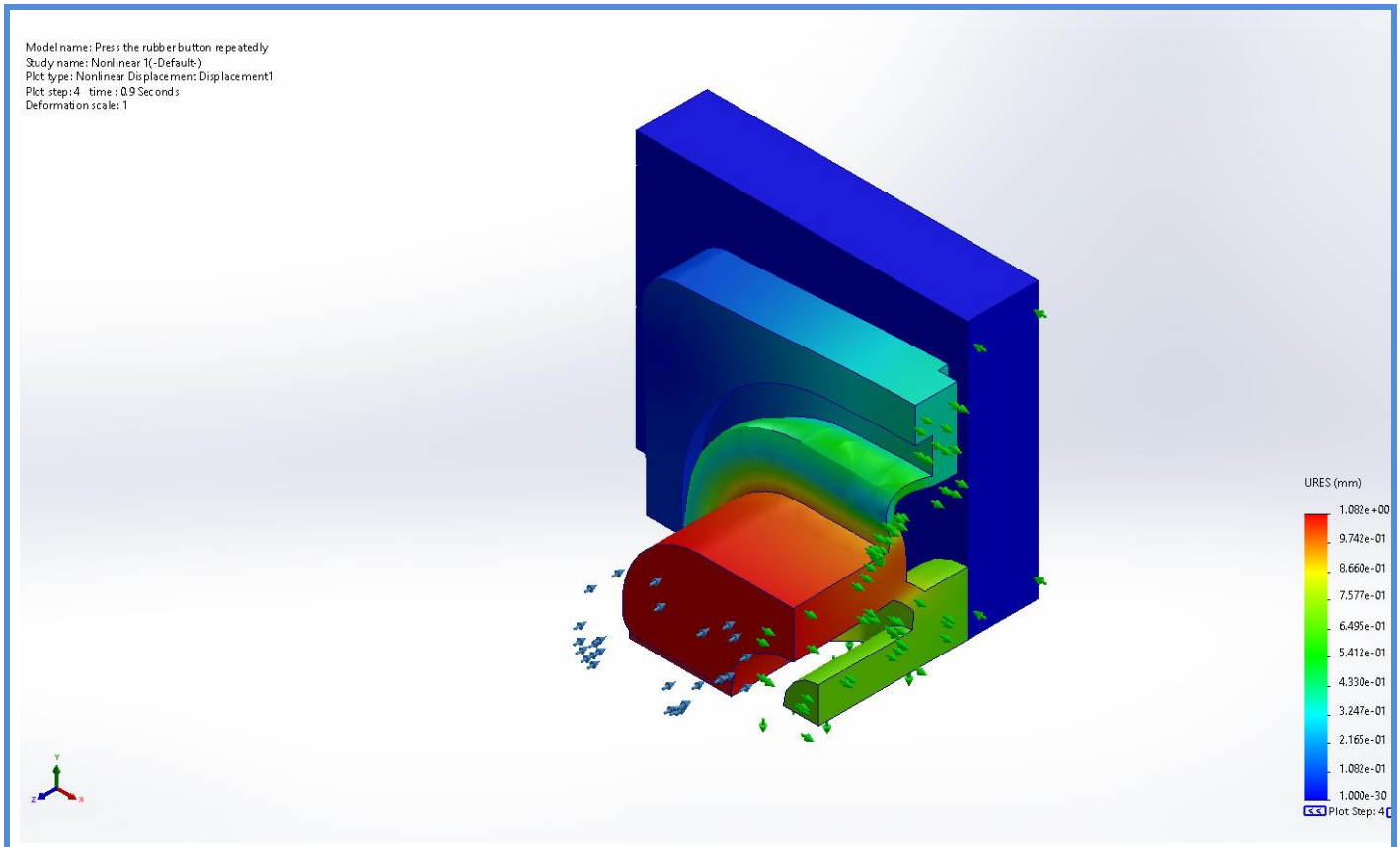

Press the rubber button repeatedly-Nonlinear 1-Displacement-Displacement1

Name	Type	Min	Max
Strain1	ESTRN: Equivalent Strain at Step No: 14(3.3 Seconds)	3.427e-11 Element: 7058	3.856e-04 Element: 6647

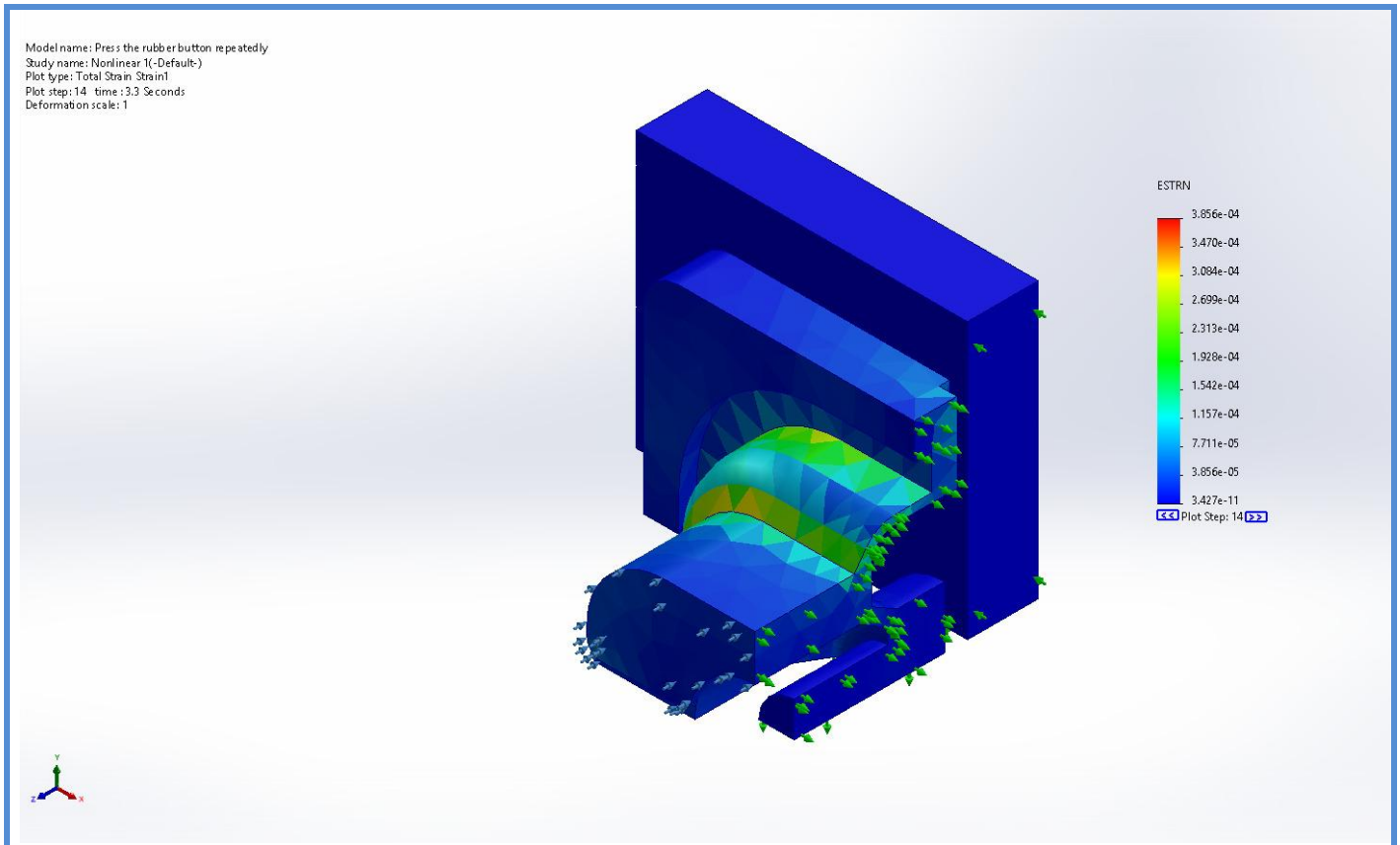

Press the rubber button repeatedly-Nonlinear 1-Strain-Strain1

Conclusion